This document is the property of BSPTCL and must not be passed on to any third person or firm not authorised by BSPTCL, nor be copied/made use of in full or part by such person or firm without our prior permission in writing

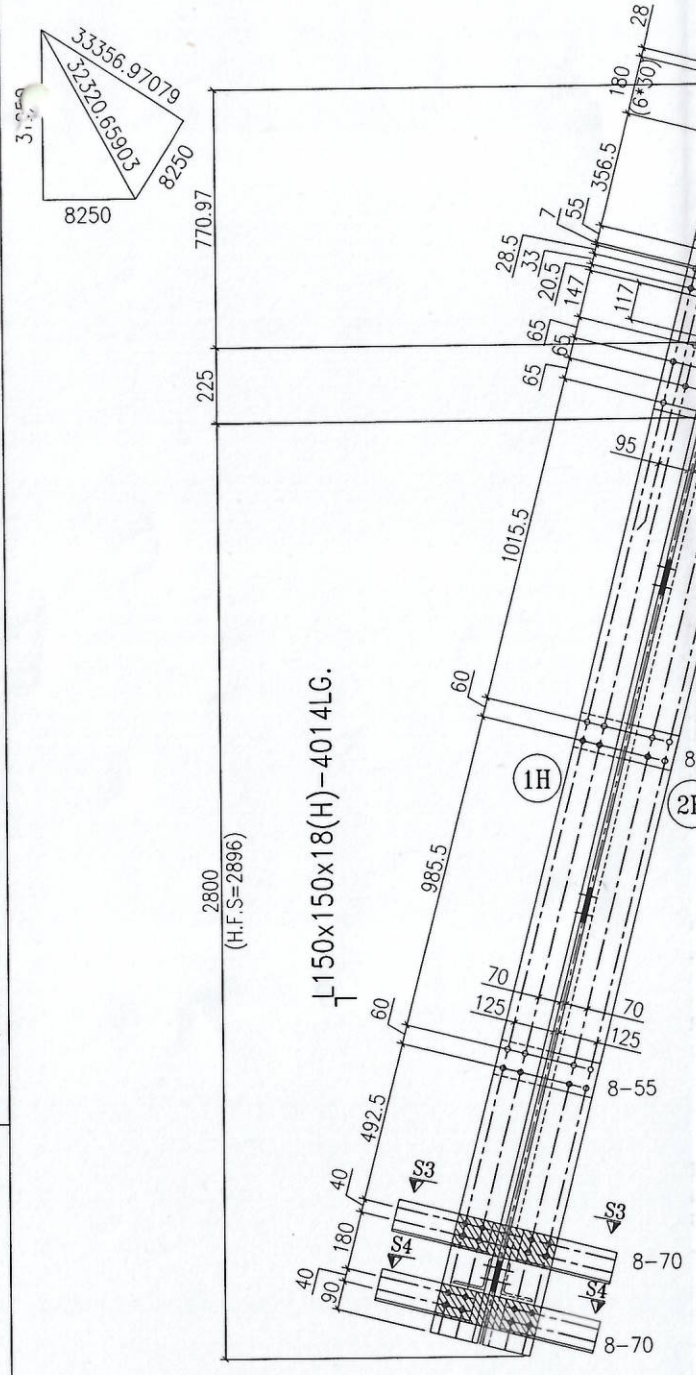

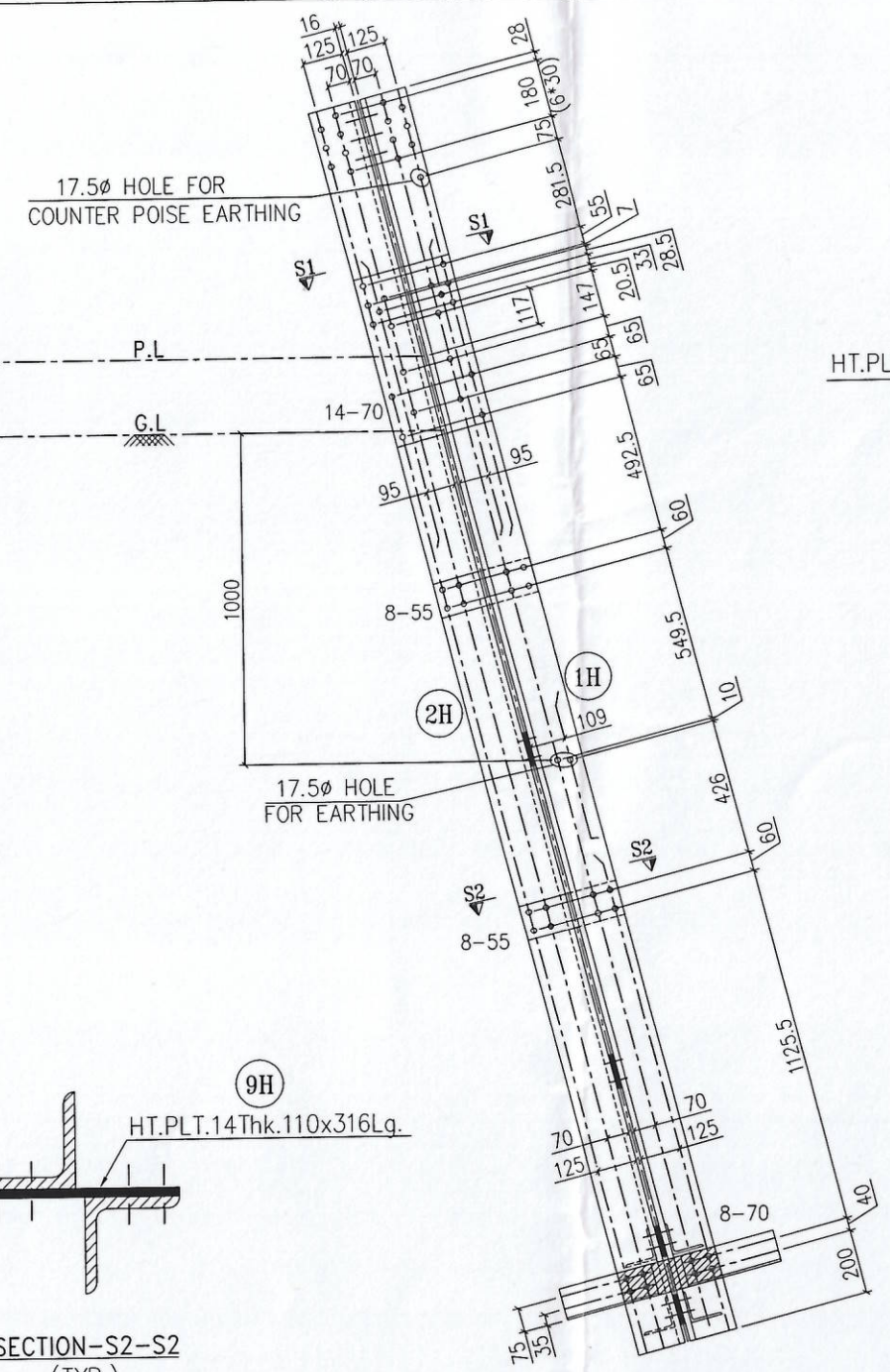

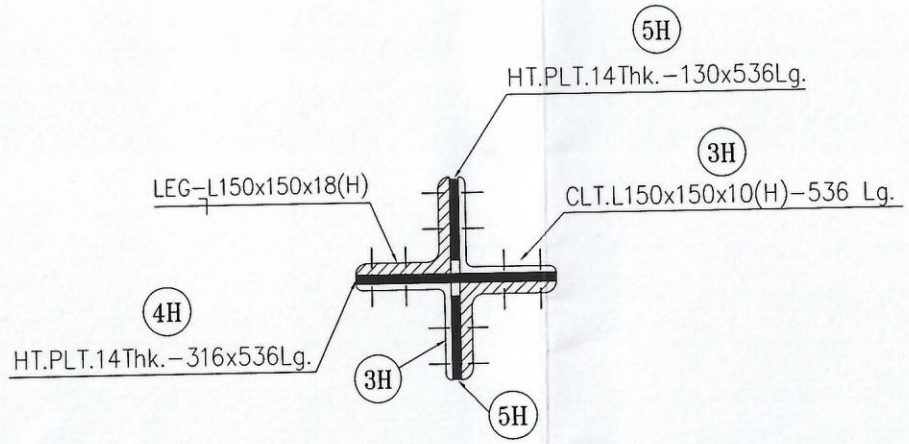

SECTION-S1-S1

SECTION-S2-S2
(TYP.)

TRANSVERSE & LONGITUDINAL FACE

REQUIREMENT OF BOLTS, NUTS AND WASHERS			
SIZE	QTY.	GRADE	REMARKS
M16øx55MM Lg.	128	5.6	BOLTS & NUTS
M16øx70MM Lg.	208	5.6	BOLTS & NUTS
16øx3.5MM THICK	336	-	SPRING WASHER

NOTES:

1. ALL DIMENSIONS ARE IN mm UNLESS OTHERWISE SPECIFIED.
2. BOLT SYMBOLS 16ø ⊕ = 17.5ø HOLES
   16ø ⊕ = 17.5ø HOLES FOR STEP BOLTS
3. ALL ERECTION MARKS ARE TO BE PREFIXED WITH "77B4DD"
4. STRUCTURAL STEEL SHALL BE AS PER IS 2062-2011
   (i) MILD STEEL - GRADE E250 QUALITY A - UNLESS OTHERWISE SPECIFIED.
   (ii) "H" STANDS FOR HIGH TENSILE STEEL - GRADE E350 QUALITY A
5. BOLTS & NUTS SHALL CONFORM TO IS : 12427-2001 (R-2007) FOR DIMENSIONS AND IS : 1367 (PART 3)-2002 FOR MECHANICAL PROPERTIES
6. GALVANISING SHALL CONFORM TO IS:2629-1985 (R-2006) & IS:4759-1996 (R-2006)
7. SPRING WASHER SHALL BE CONFORM TO IS 3063-1994 (R-2004)

PART NO. 1 TO 9

APPROVED
Subject to the condition that you are not absolved of the responsibility for correctness of the materials supplied as per specification
24/9
Electrical Superintending Engineer
(Planning and Engineering)
Bihar State Power Transmission Company Limited
Vidyut Bhawan, Patna-800021
Sk 24.09.19

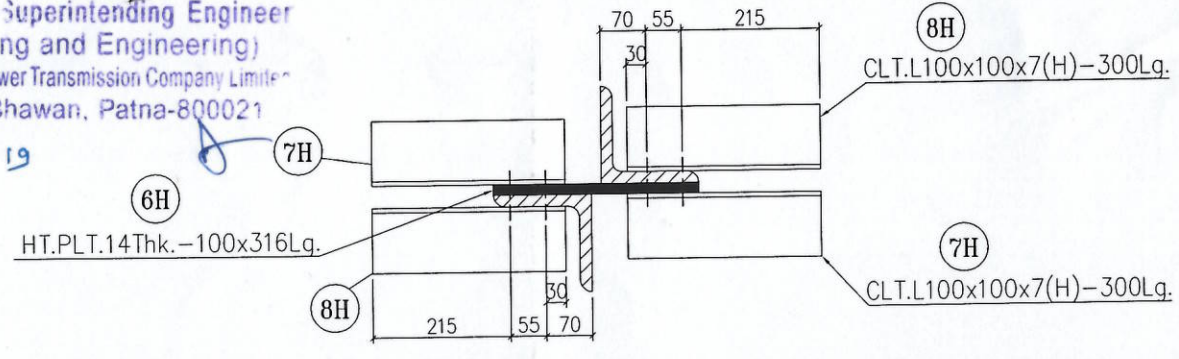

SECTION-S3-S3

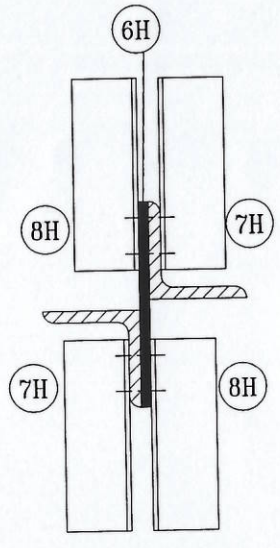

SECTION-S4-S4

DATE	REV.NO.	DESCRIPTION	DESIGNED	CHECKED	DRAWN	CHECKED	APPROVED
17.08.19	1	RESUBMISSION AFTER SUCCESSFUL TOWER TESTING	RSK	RJR	MBR	PU/BSR	CSR
11.03.19	0	FIRST SUBMISSION FOR APPROVAL	RSK	RJR	MR	SVR/BSR	CSR

STRUCTURAL DETAILING

REVISIONS

CLIENT : BIHAR STATE POWER TRANSMISSION CO.LTD., PATNA

SUPPLIER / CONTRACTOR : L&T Construction
Power Transmission & Distribution

PROJECT : PACKAGE - NIT 77 UNDER STATE PLAN [80:20], CONSTRUCTION OF :
(I) LILO OF BARH-PATNA 400 KV D/C (QUAD) TL AT BAKHTIYARPUR (LINE LENGTH 10RKM),
(II) 220 KV D/C BAKHTIYARPUR - SHEIKHPURA TL (ACSR ZEBRA) (LINE LENGTH - 51 RKM)
(III) 220 KV D/C BAKHTIYARPUR -HATHIDAH TL (ACSR ZEBRA) (LINE LENGTH -52 RKM) AND
(IV) 220 KV D/C BAKHTIYARPUR – FATHUA TL (ACSR ZEBRA) (LINE LENGTH - 28 RKM)

JOB No. : 018089-T-TL

	NAME	DATE
DSGN	RSK	25.02.19
DRWN	MR	26.02.19
CHKD	SVR/BSR	26.02.19
APPD	CSR	26.02.19

TITLE : GA OF STUB & CLEATS
(NT TO +9M EXTN.)
FOR TOWER TYPE-"4DD(30°-60°)/DE(0°-15°)"
400KV D/C QUAD ACSR MOOSE (WZ-4)
(3M DEPTH FOUNDATION)

SCALE 1 : 25

SHEET NO. 1 OF 1

DRG. No. 0 1 8 0 8 9 - T - T L - 8 D - G A - 0 4 0 1

SIZE A3 REV. 1

RELEASED FOR ☐ PRELIMINARY ☐ TENDER ☐ INFORMATION ☑ APPROVAL ☐ CONSTRUCTION

PATH